SOLATUBE 300DS-C
(14 IN / 355 MM)
PITCHED SELF FLASHING
SUSPENDED CEILING

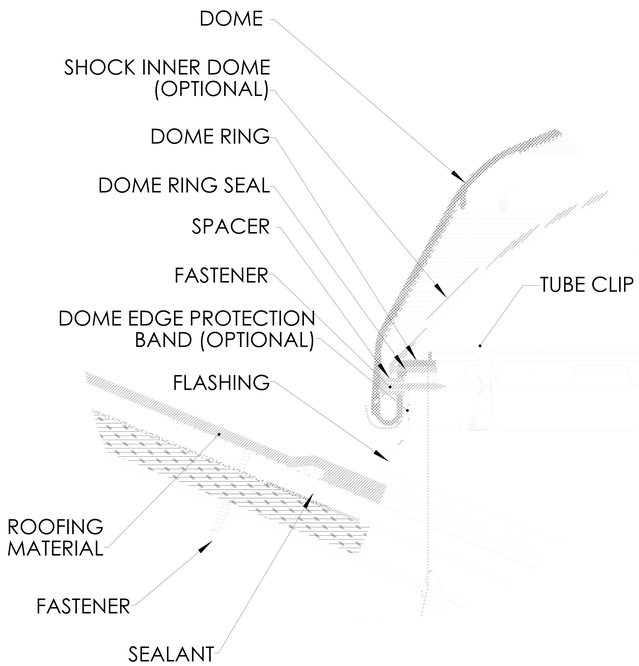

DETAIL B
SCALE 3 : 1

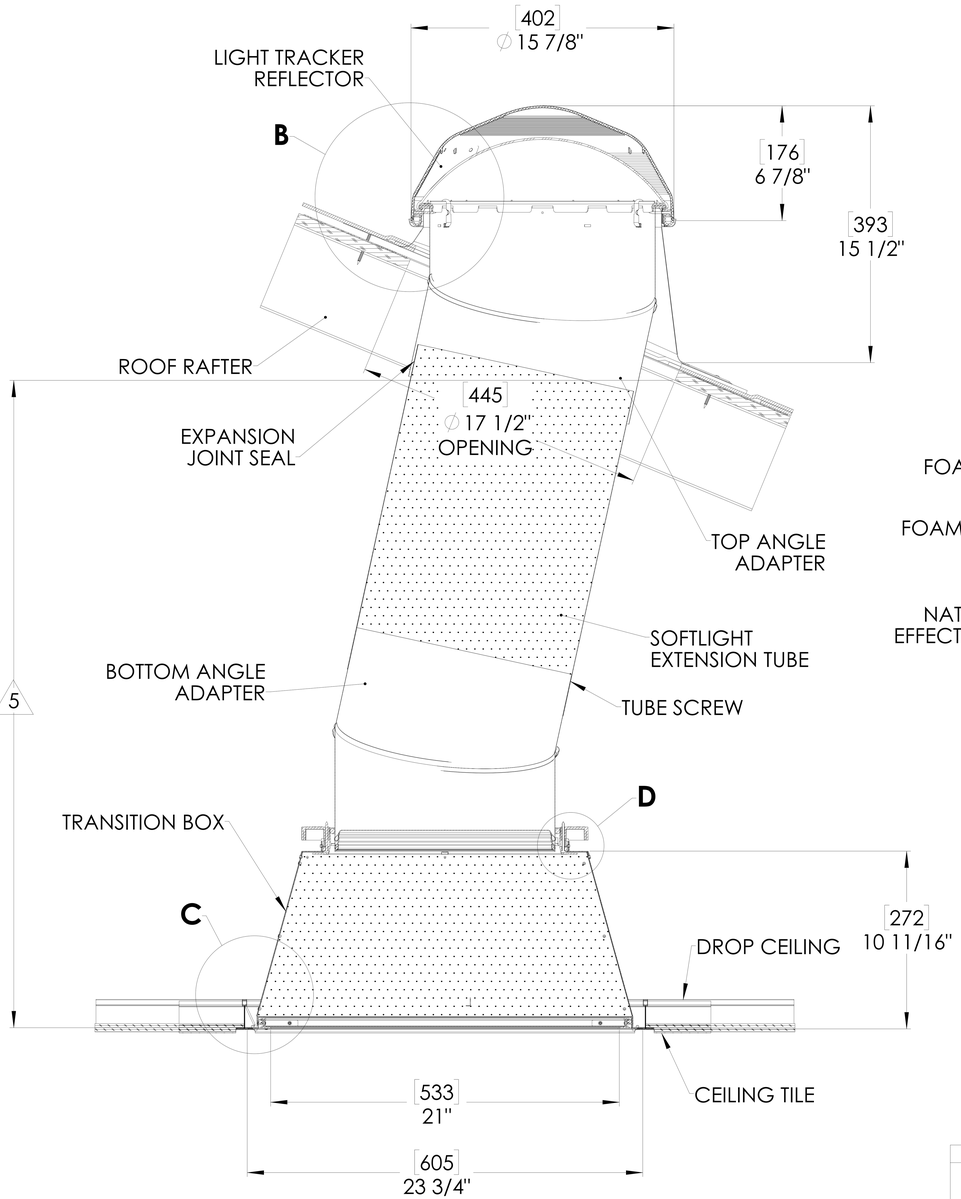

FULL SECTION
SCALE 1:1

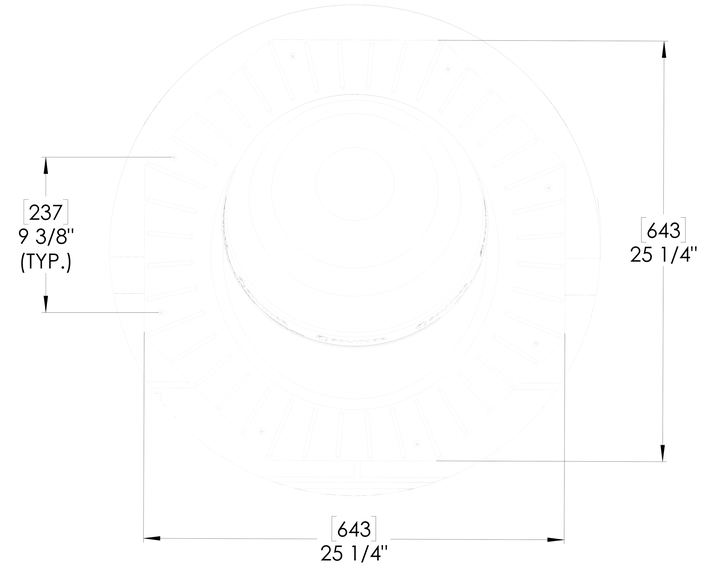

TOP VIEW

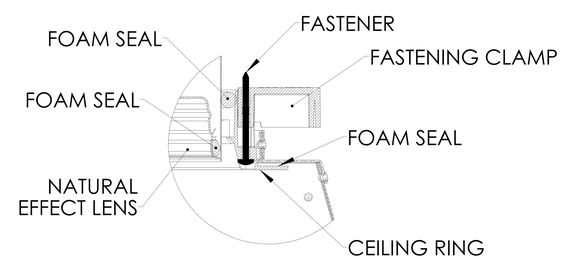

DETAIL D
SCALE 3 : 1

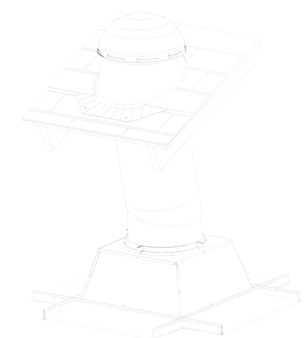

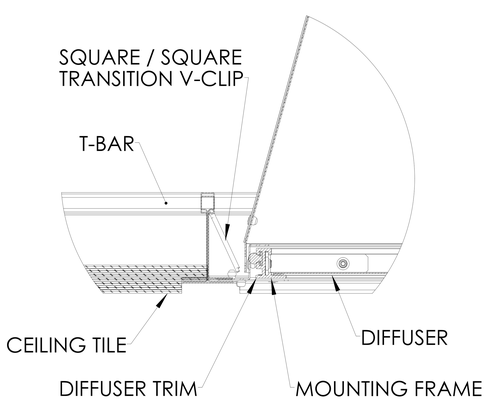

DETAIL C
SCALE 3 : 1

NOTES:
1. STRUCTURAL ELEMENTS (PLYWOOD, RAFTERS, DRYWALL ETC. BY OTHERS & SHOWN FOR REFERENCE ONLY.
2. ALL TUBE JOINTS & SEAMS TAPED WITH 2" FOIL TAPE (NOT SHOWN).
3. DIMENSIONS IN BRACKETS ARE METRIC UNLESS OTHERWISE SPECIFIED.
4. 6" MIN CLEARANCE SHOULD BE MAINTAINED FROM ALL SOLATUBE COMPONENTS AND OTHER PLENUM COMPONENTS.

5 . 30" MIN HEIGHT NEEDED FOR TRANSITION BOX

6. ONE (1) SOFTLIGHT EXTENSION TUBE PER DAYLIGHTING SYSTEM. MUST INSTALL AS FINAL EXTENSION TUBE PRIOR TO THE BOTTOM (ANGLE) TUBE.

UNLESS OTHERWISE SPECIFIED: DIMENSION TOLERANCE FRACTIONS ± 1/4" INCH: .X ± .1, .XX ± .06 MILLIMETER: [.X] ± 2.5, [.XX] ± 1.5	SOLATUBE INTERNATIONAL, INC. COPYRIGHT 2026 WWW.SOLATUBE.COM	SOLATUBE 2210 OAK RIDGE WAY VISTA, CALIFORNIA 92081-8341 PH (760) 597-4400
MATERIAL -- --	DRAWN BY: STEVENS DATE: 6/1/2026	TITLE: 300 DS PITCHED SELF FLASHING SUSPENDED CEILING
FINISH --	CHECKED BY: -- DATE: --	SIZE: D DWG. NO.: S300DS-C-DAI-FP-TM-LN REV: 1
DO NOT SCALE DRAWING	APPROVED BY: -- -- DATE: --	SCALE: 1:1 SHEET 1 OF 1