SOLATUBE
S750DS-O-DPI-FC CCI-EXX E-L2P
(21 IN / 530 MM)
CURB CAP, OPEN CEILING
OPTIONAL DAYLIGHT DIMMER

NOTES:

1. STRUCTURAL ELEMENTS (PLYWOOD, RAFTERS, DRYWALL ETC.) BY OTHERS & SHOWN FOR REFERENCE ONLY.
2. ALL TUBE JOINTS & SEAMS TAPED WITH 2" FOIL TAPE (NOT SHOWN).
3. DIMENSIONS IN BRACKETS ARE METRIC UNLESS OTHERWISE SPECIFIED.
4. 6" MIN. CLEARANCE SHOULD BE MAINTAINED FROM ALL SOLATUBE COMPONENTS AND OTHER PLENUM COMPONENTS.

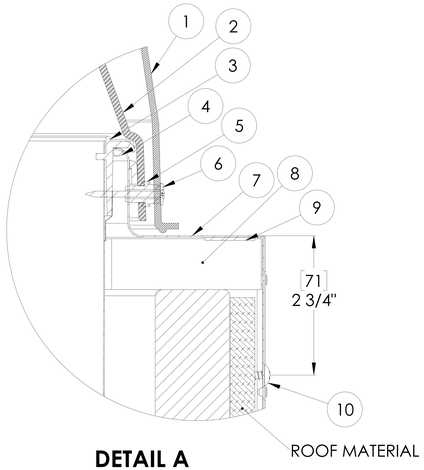

DETAIL A
SCALE 3 : 1

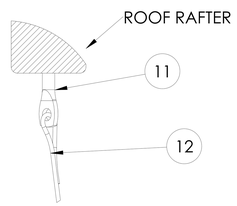

DETAIL B
SCALE 3 : 1

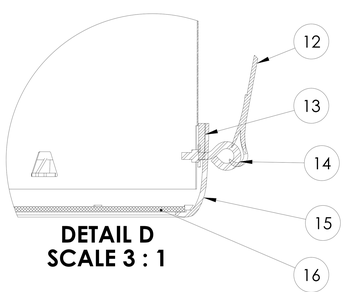

DETAIL D
SCALE 3 : 1

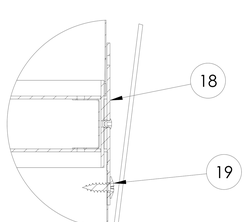

DETAIL C
SCALE 3 : 1

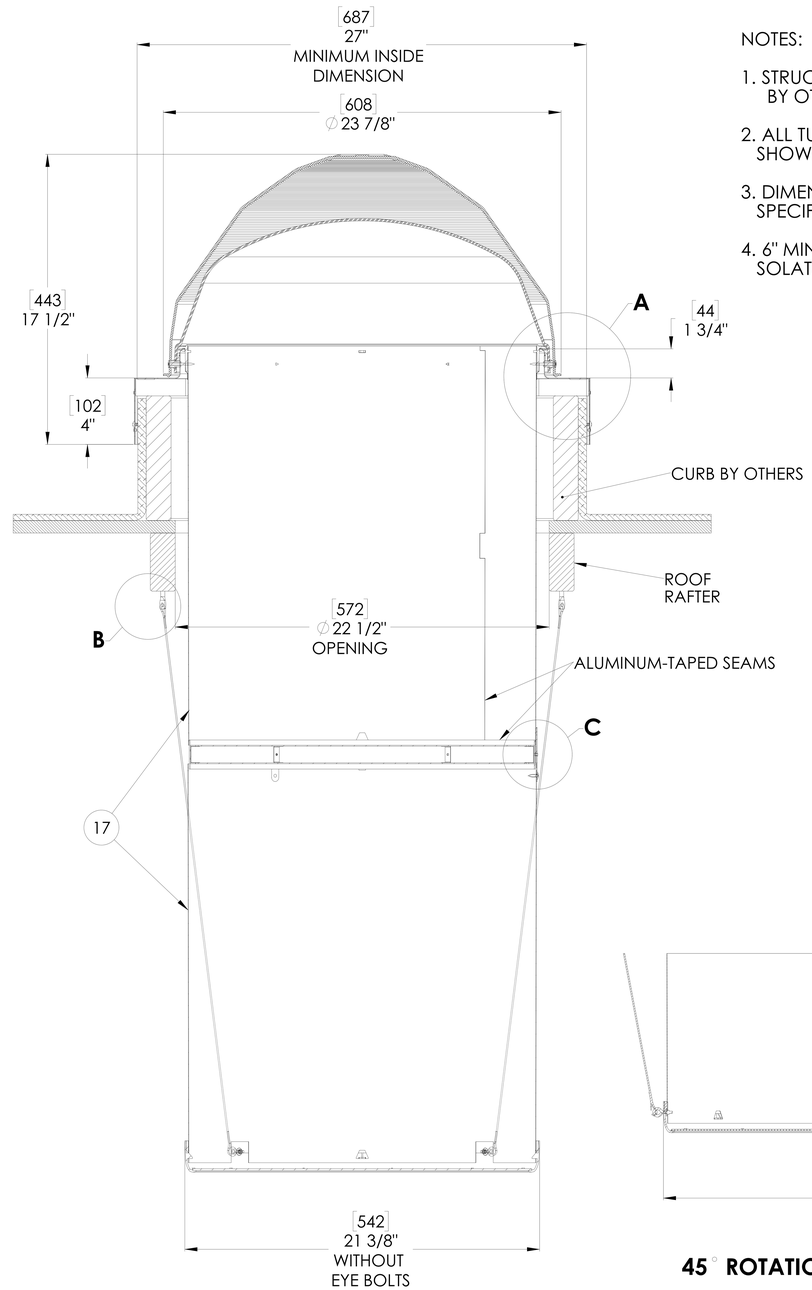

FULL SECTION
SCALE 1:1

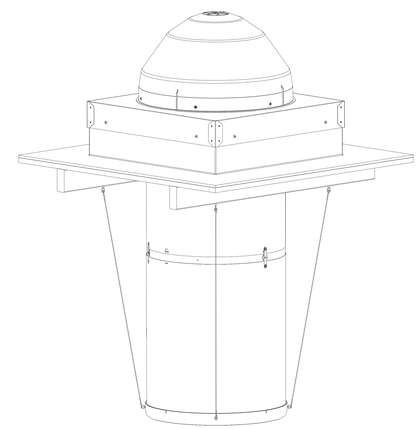

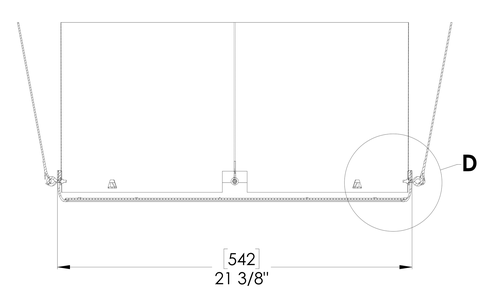

45° ROTATION ABOUT CENTER
-
SECTION VIEW

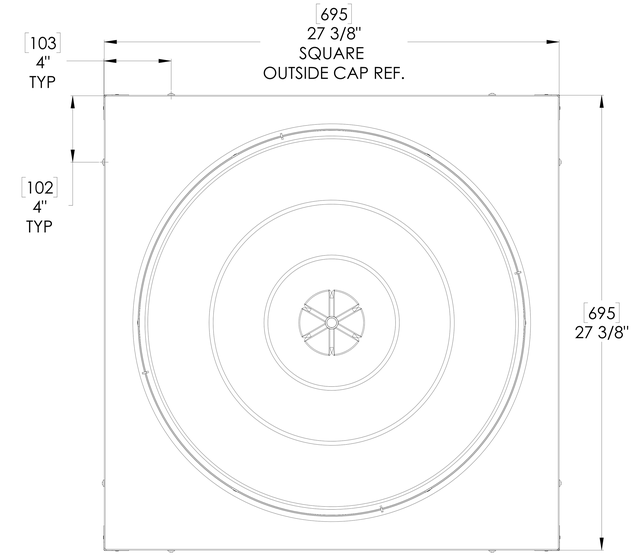

TOP VIEW
SCALE 1:1

ITEM NO.	QTY.	PART NO.	DESCRIPTION	NOTES
1	1	401930	PRISMATIC DOME 750DS	ACRYLIC
2	1	511200	INNER DOME 330DS	POLYCARBONATE
3	1	400785	DOME RING	
4	1	600280	PILE WEATHER STRIP	
5	6	700870	SPACER	
6	6	700860	SCREW #8X 1.5" SMS	
7	1	230640	FLASHING CURB CAP	
8	1	500970	CURB CAP INSULATION	
9	1	700280	SEALANT URETHANE	AS REQUIRED
10	8	700480	SCREW #10 X 2" SMS	
11	4	400410	SCREW HANGER 3"	
12	2	400400	SUSPENSION WIRE	12 GAUGE, 25' EACH
13	1	600250	OC DIFFUSER SEAL 21"	
14	1	520080	EYEBOLT W/NUT AND WASHER	
15	1	410135	DRESS RING	POLYCARBONATE
16	1	410087	PRISMATIC DIFFUSER	POLYCARBONATE
17	2	301770	TUBE 24" EXTENSION	QTY. PROVIDED AS REQ'D
18	1	480320	THERMAL INSULATION PANEL	330 DS
19	3	503440	SCREW #8 X 9/16" SMS	
OPTIONAL COMPONENTS				
ITEM NO.	QTY.	PART NO.	DESCRIPTION	NOTES
20	1	570003	21" DAYLIGHT DIMMER	

UNLESS OTHERWISE SPECIFIED:

DIMENSION TOLERANCE

FRACTIONS ± 1/4"

INCH	MILLIMETER
.X ± .1	[.X] ± 2.5
.XX ± .06	[.XX] ± 1.5

MATERIAL
--
--

FINISH
--

DO NOT SCALE DRAWING

SOLATUBE INTERNATIONAL, INC.
COPYRIGHT 2018

WWW.SOLATUBE.COM

DRAWN BY	DATE
T.BRINKMAN	12/13/2018
CHECKED BY	DATE
--	--
APPROVED BY	DATE
--	--

SOLATUBE
2210 OAK RIDGE WAY
VISTA, CALIFORNIA 92081-8341
PH (760) 597-4400

TITLE:
750 DS (21") CURB FLASHING, OPEN CEILING
PC DIFFUSER W/SUSPENSION WIRE & TIP

SIZE	DWG. NO.	REV
D	750DS-O-DPI-FC-CCI-E-TIP-L2P-REG	1

SCALE: 1:1 SHEET 1 OF 1