SOLATUBE 290 DS
(14 IN / 350 MM)
CURB CAP
SUSPENDED CEILING W/JUST FROST

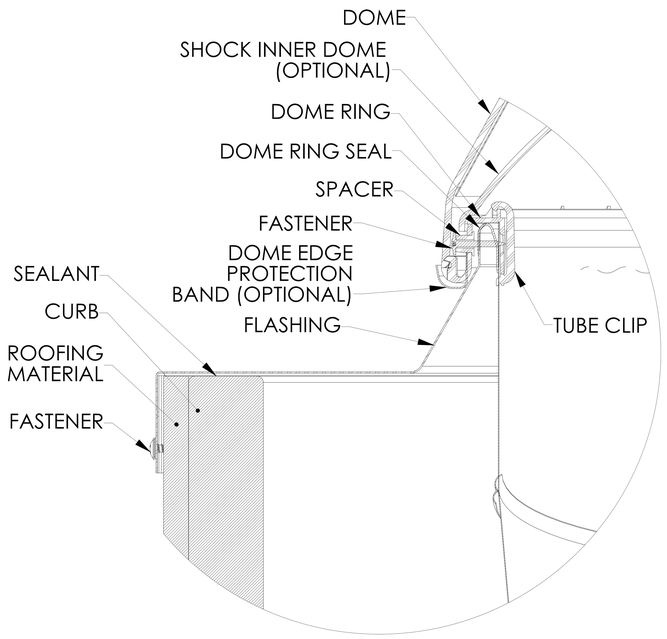

DETAIL A
SCALE 3 : 1

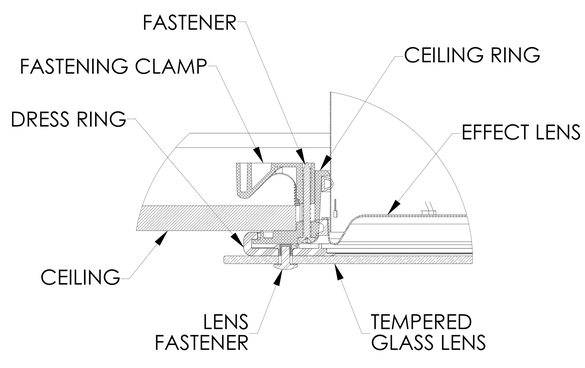

DETAIL C
SCALE 3 : 1

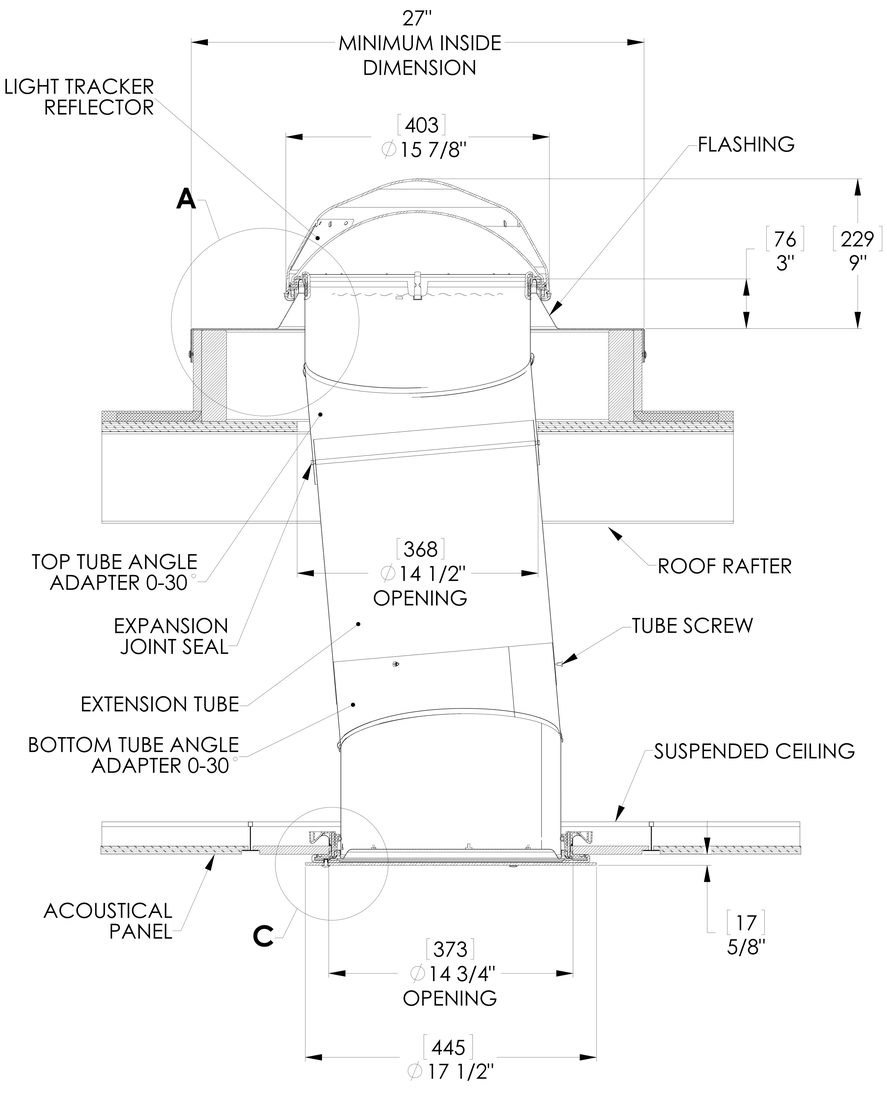

FULL SECTION
SCALE 1:1

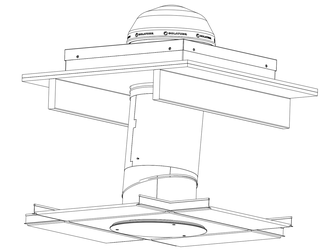

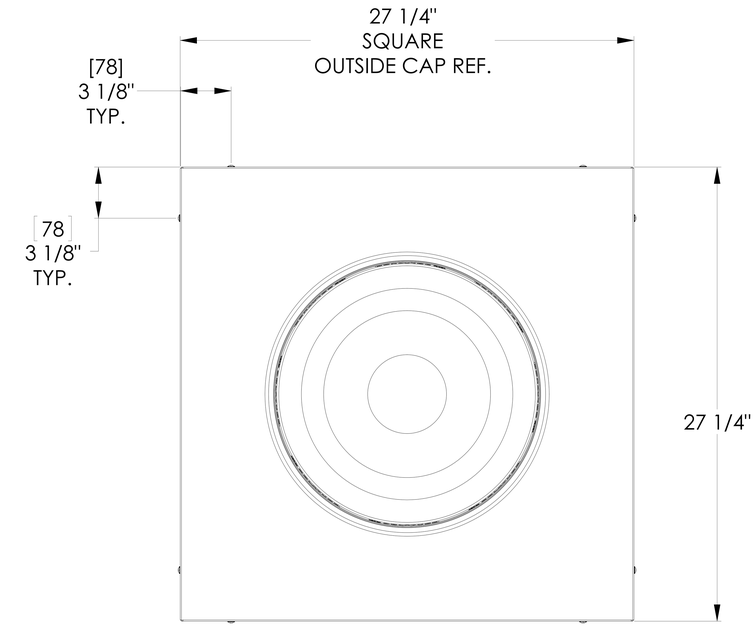

TOP VIEW

NOTES:

1. STRUCTURAL ELEMENTS (PLYWOOD, RAFTERS, DRYWALL ETC. BY OTHERS & SHOWN FOR REFERENCE ONLY.
2. ALL TUBE JOINTS & SEAMS TAPED WITH 2" FOIL TAPE (NOT SHOWN).
3. DIMENSIONS IN BRACKETS ARE METRIC UNLESS OTHERWISE SPECIFIED.
4. 6" MIN CLEARANCE SHOULD BE MAINTAINED FROM ALL SOLATUBE COMPONENTS AND OTHER PLENUM COMPONENTS.

UNLESS OTHERWISE SPECIFIED: DIMENSION TOLERANCE FRACTION : ±1/4" INCH .X ± .1 MILLIMETER [.X] ± 2.5	SOLATUBE INTERNATIONAL, INC. COPYRIGHT 2011 WWW.SOLATUBE.COM	SOLATUBE 2210 OAK RIDGE WAY VISTA, CALIFORNIA 92081-8341 PH (760) 597-4400
MATERIAL -- --	DRAWN BY STEVENS / DATE 23 NOV 11	TITLE: SOLATUBE 290 DS CURB FLASH'G SUSPEN'D CEILING (JF)
FINISH --	CHECKED BY -- / DATE --	SIZE / DWG. NO. WEB-290DS-CF-SC-JF / REV A
DO NOT SCALE DRAWING	APPROVED BY -- / DATE --	SCALE: 1:1 / SHEET 1 OF 1